CORD	REV	REVISION RECORD	AUTHORITY	DATE
	A	RELEASED	W.C.	8-91
	B	ECO 2164	W.C.	11-91
	C	ECO 2184	W.C.	11-91
	D	ECO 2285	W.C.	11-91
	E	ECO 2325	W.C.	11-91
	F	ECO 2582	W.C.	1-92
	G	ECO 2424	W.C.	3-92
	H	ECO 2588	W.C.	3-92
	I	ECO 2712	W.C.	7-92
	J	ECO 2810	W.C.	9-92
	K	ECO 2959	W.C.	12-92
	L	ECO 3002	W.C.	1-93
	M	ECO 3019	WC	4-93
	N	ECO 3044	WC	4/93
	O	ECO 3067	WC	4-93

NOTE

TT-260 WAS CHANGED TT-260-F
PER ECO 2959

PRIMARY PART # SS-7601 MTA30N06E (2) REF DES Q3, Q4

SECONDARY PART # SS-0348 MTP50N05 (2) HW-883 (1)
PER ECO 3044

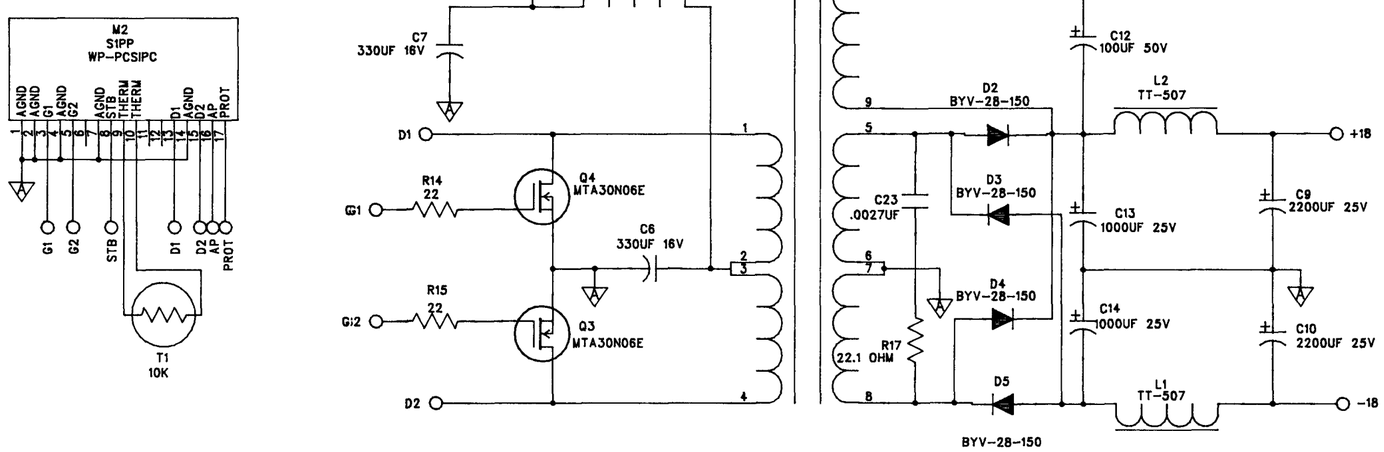

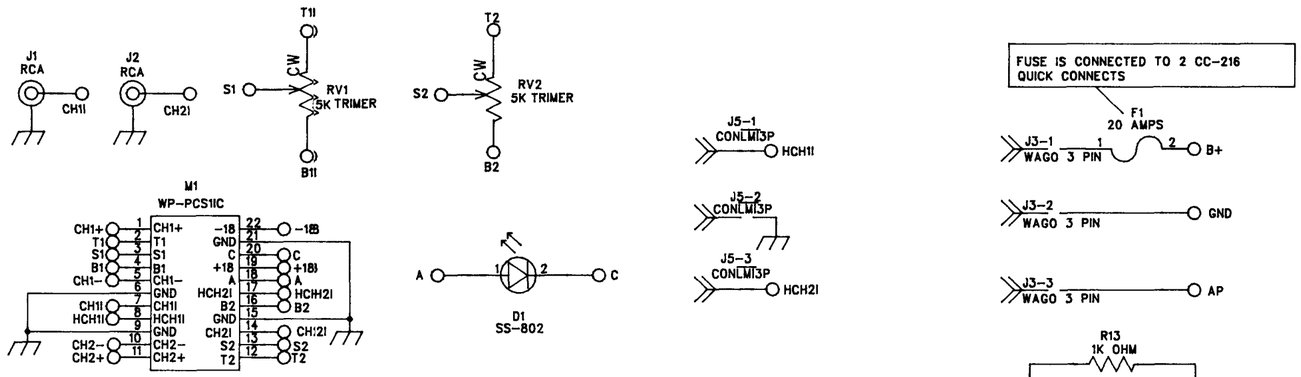

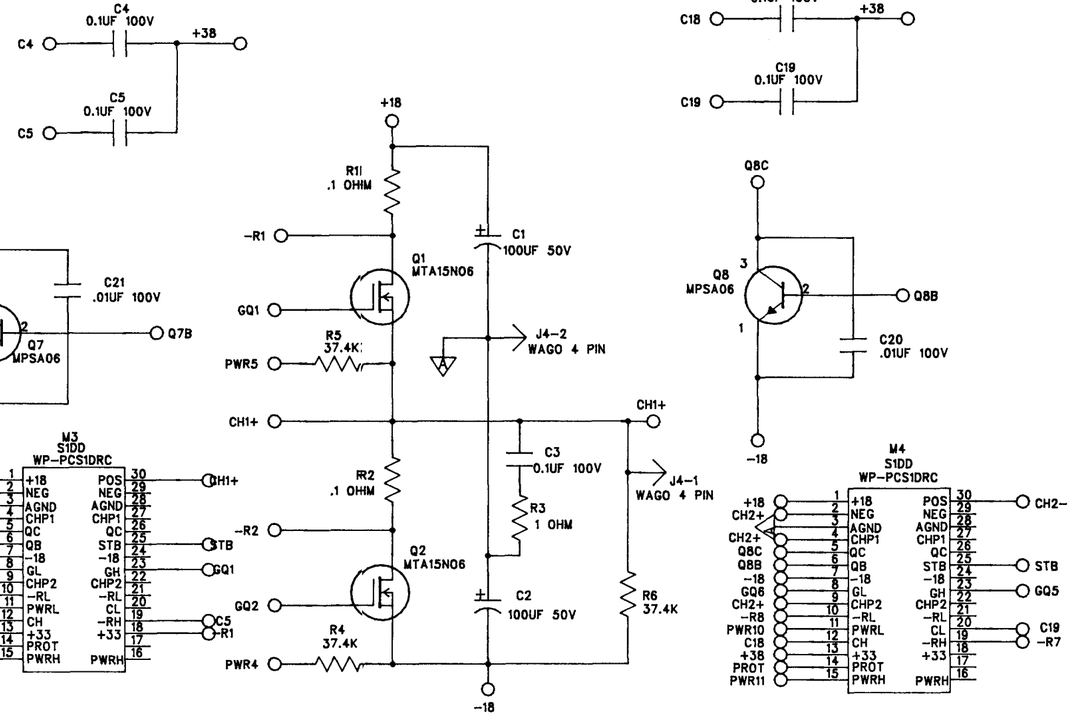

CONFIDENTIAL

© Copyright 1993 Rockford Corporation. This drawing is the property of Rockford Corporation and embodies confidential information, trade secret information, and/or know-how which is the property of Rockford Corporation. By accepting this drawing, the recipient agrees not to provide, or otherwise make available, the drawing, or any information or know how embodied therein, to any third party without prior written authorization.

DWN	C.SHAH	5/24/91	ROCKFORD CORPORATION FOSGATE DIVISION TEMPE AZ
CHK		4/22/93	
ENGR	CLIFFORD	5/24/91	TITLE: SCHEMATIC: SERIES ONE 260SD AMPLIFIER
APVD		5/3/93	
APVD		4/23/93	SIZE C / SCALE 1X / SHEET 1 OF 1
MATL/FS		FILE NAME: 2600	PART NO.: SCH-260 / REV: 0